# Onderdelen voor

| nÂ° | Artikel | Aantal gebruikt |
|---|---|---|
| 1 | 984509 SEAL LOCK HEX. SOCKET HD. BOLT M5X14 (OLD 315636) | 2 |
| 2 | 949454 SPRING WASHER M5 (10 PCS) | 2 |
| 3 | 306888 PUSH BUTTON | 1 |
| 4 | 320219 SPRING | 1 |
| 5 | 937033 FELT WASHER | 1 |
| 6 | 330080 GEAR COVER ASS'Y | 1 |
| 7 | 320226 SPECIAL NUT M10 | 1 |
| 8 | 6301VV BALL BEARING 6301VVCMPS2S | 1 |
| 9 | 330031 RUBBER RING | 1 |
| 10 | 330030 BEARING COVER | 1 |
| 11 | 360959E ARMATURE 220-230 VOLT (OLD 360921E) | 1 |
| 12 | 330081 FAN GUIDE | 1 |
| 13 | 961501 HEX .HD. TAPPING SCREW D5X60 | 2 |
| 14 | 340844E STATOR ASS'Y 220-230 VOLT | 1 |
| 15 | 330029 DUST SEAL | 1 |
| 16 | 6000VV BALL BEARING 6000VVCMPS2L | 1 |
| 17 | 937623 BRUSH TERMINAL (OLD 976831) | 2 |
| 18 | 323209 TAPPING SCREW D5X35 (W/FLANGE) BLACK | 4 |
| 19A | 336864 SIDE HANDLE | 1 |
| 19 | 937981 SIDE HANDLE FOR M14 (OLD 321542) | 1 |
| 20 | 939542 RETAINING RING FOR D12 (10 PCS) | 1 |
| 21 | 949236 MACHINE SCREW M5X10 (10 PCS) | 2 |
| 22 | 320229 BEARING COVER (B) | 1 |
| 23 | 6302VV BALL BEARING 6302VVCMPS2S | 1 |
| 24 | 990852 FELT PACKING (B) | 1 |
| 25 | 320234 SPINDLE | 1 |
| 26 | 320228 SEAL PLATE | 1 |
| 27 | 320227 PACKING GLAND | 1 |
| 28 | 994192 HEX.SOCKET HD.BOLT | 4 |
| 29 | 949760 HEX.SOCKET HD.BOLT M8X25 (10 PCS) | 1 |
| 30 | 330036 WHEEL GUARD ASS'Y | 1 |
| 31 | 937908Z WHEEL WASHER (B) | 1 |
| 32 | 937909Z WHEEL NUT M14X2 | 1 |
| 33 | 306890 LOCK PIN | 1 |
| 34 | 330688 GEAR AND PINION SET | 1 |
| 35 | 945161 BRUSH CAP | 2 |
| 36 | 999038 CARBON BRUSH (1 PAIR) | 2 |
| 37 | 938241 BRUSH HOLDER (OLD 938241Z) | 2 |

# Onderdelen voor

| nÂ° | Artikel | Aantal gebruikt |
|---|---|---|
| 38 | 330028 HOUSING ASS'Y | 1 |
| 39 | NAME PLATE | 1 |
| 40 | 938477 HEX.SOCKET SET SCREW M5X8 | 2 |
| 41 | 330216 INTERNAL WIRE 270L | 1 |
| 42 | 959140 CONNECTOR 50091 (10 PCS.) | 1 |
| 43 | 330033 HANDLE (A) | 1 |
| 44 | 981373 TUBE (D) | 2 |
| 45 | 959141 CONNECTOR 50092 (10 PCS) (OLD 939558) | 2 |
| 46 | 960266 CORD CLIP | 1 |
| 47 | 984750 TAPPING SCREW (W/FLANGE) D4X16 | 2 |
| 48 | 305812 TAPPING SCREW (W/FLANGE) D4X16 (BLACK) | 4 |
| 49 | 330034 HANDLE (B) | 1 |
| 50 | 335122 CONTROLLER SWITCH 250 VOLT | 1 |
| 51 | 958049 CORD ARMOR D8.2 (OLD 958049Z) | 1 |
| 51 | 940778 CORD ARMOR D10.7 | 1 |
| 52 | 500439Z CORD FOR AUS (OLD 500226Z/500411Z) | 1 |
| 52 | 500450Z CORD 230 VOLT GBR | 1 |
| 52 | 500247Z CORD (NEW 714500) | 1 |
| 52 | 500248Z CORD FOR SUI | 1 |
| 501 | 325491 WRENCH | 1 |
| 502 | 872422 HEX. BAR WRENCH 6MM | 1 |
| 503A | 937907Z WHEEL WASHER (C) | 1 |
| 504 | 937917Z WHEEL NUT (B) | 1 |
| 601 | 316825 D. C. WHEELS 230MM A24R (25 PCS.) | 1 |
| 602 | 323993 PIPE HANDLE SET (OLD 322141) | 1 |
| 603 | 985597 BOLT M14 | 2 |
| 604 | 310337 SUPER WHEEL WASHER | 1 |
| 605 | 332797 WHEEL GUARD (FOR CUTTING) | 1 |

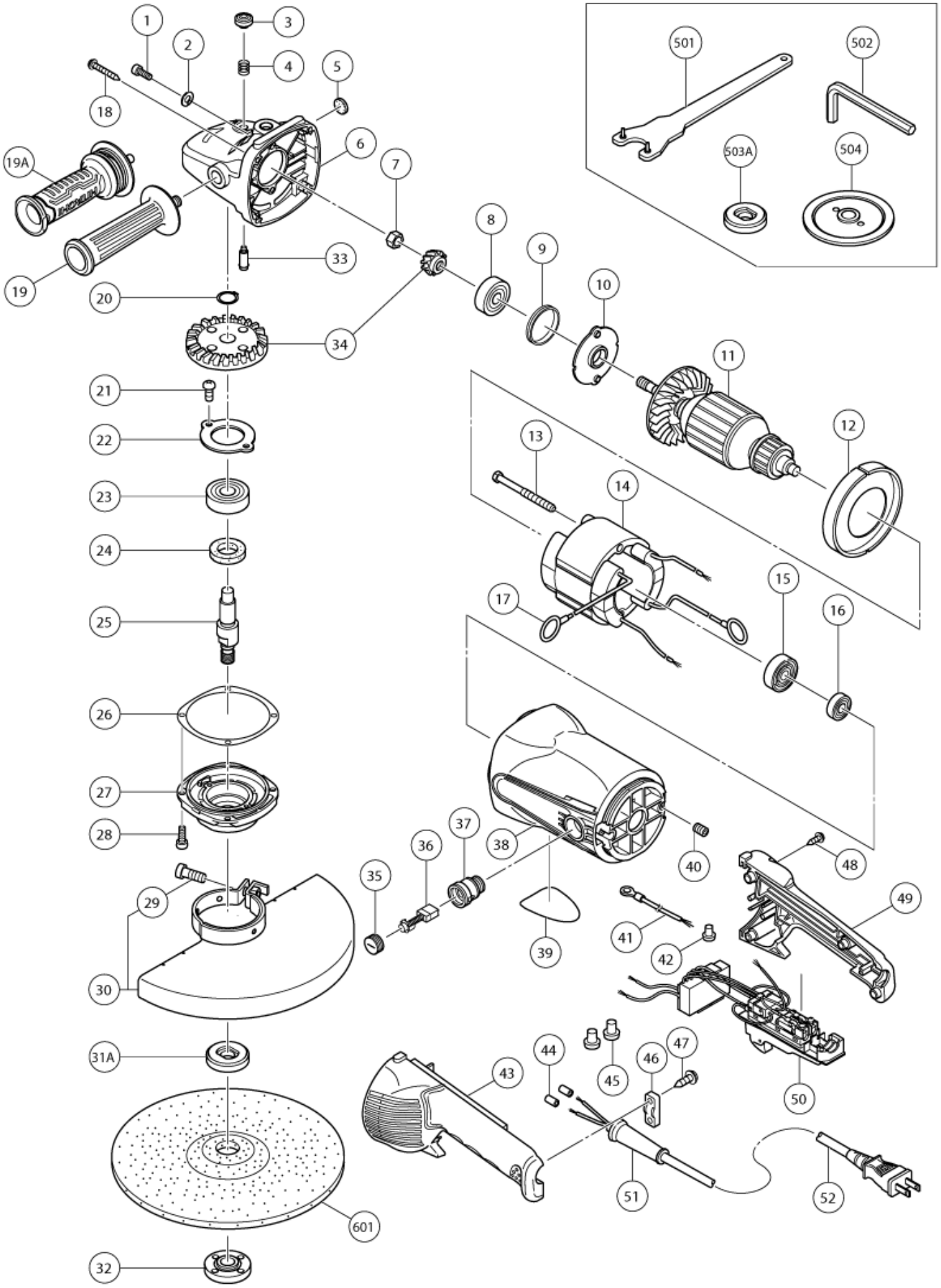


Rev.3

| 形　名 |
| --- |
| G23SWU |